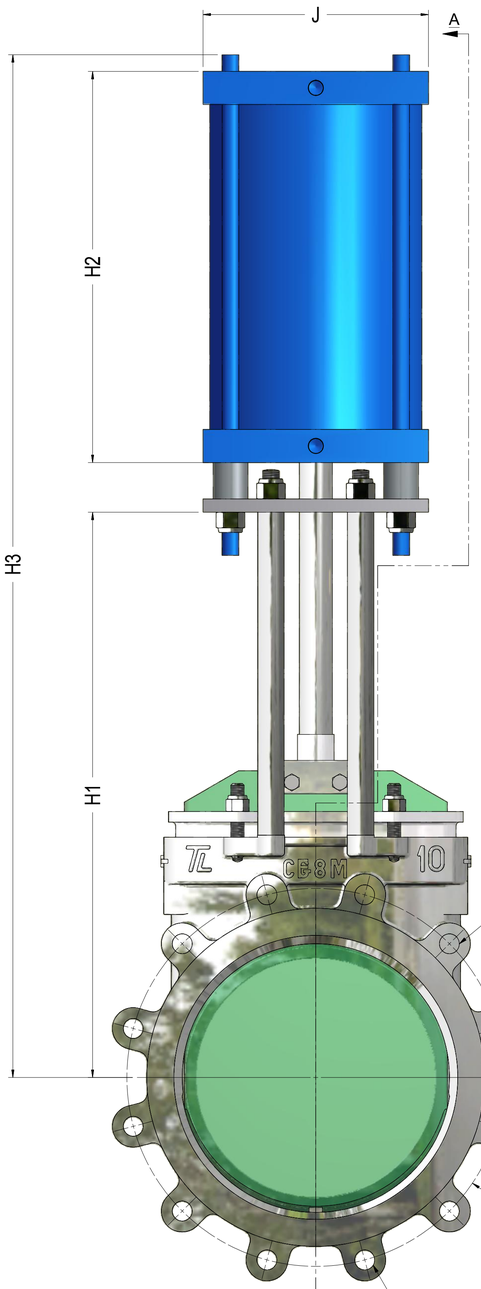

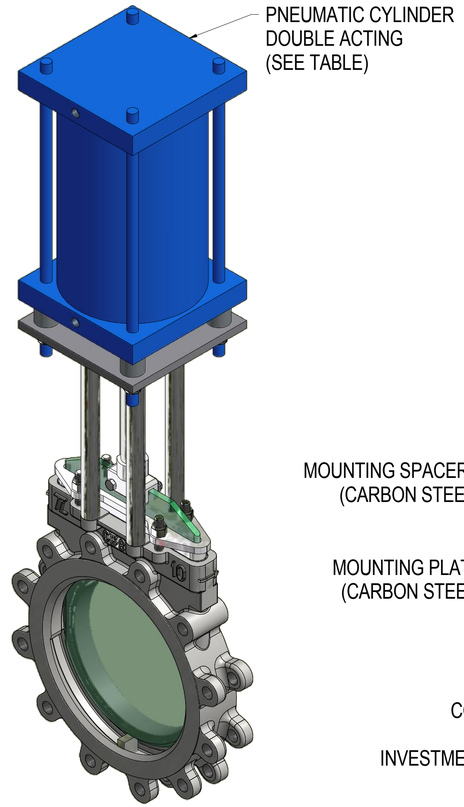

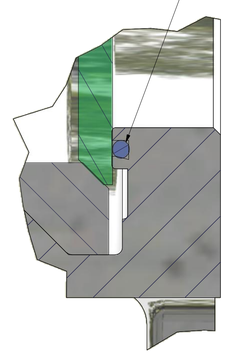

DETAIL F

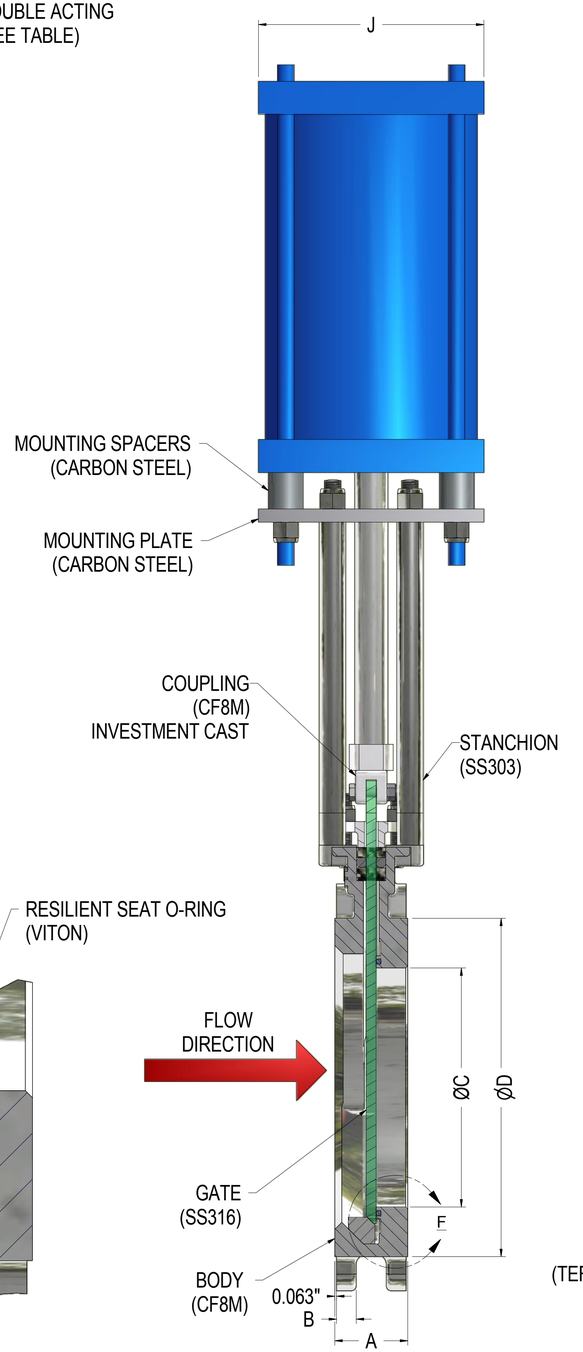

SECTION A-A

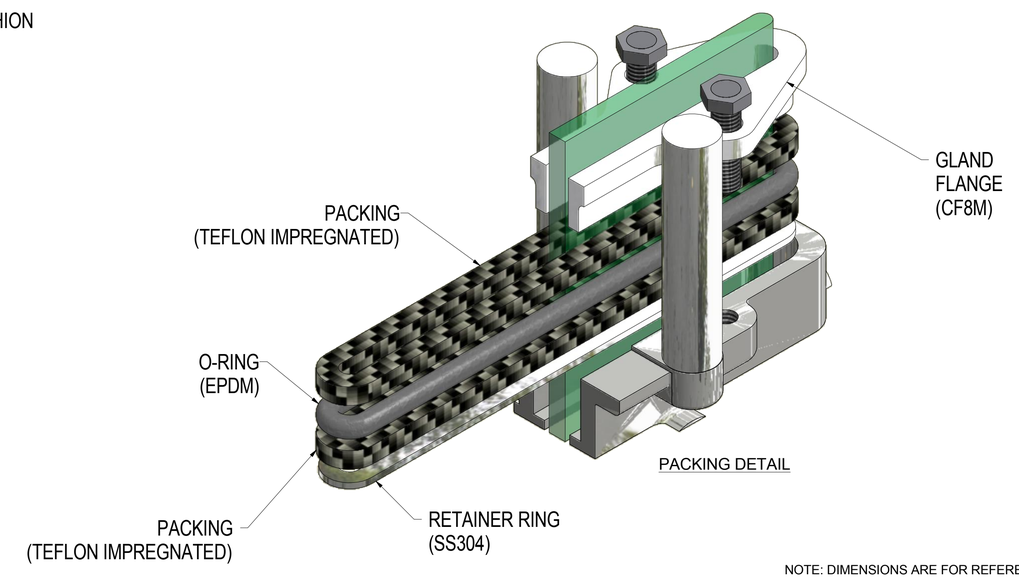

PACKING DETAIL

SIZE	CYLINDER		A	B	ØC	ØD	F	G	H1	H2	H3	J	ØK	L	M
2	3.25"x3"	IN	1.88	0.5	1.89	3.62	4	5/8"-11	7.87	6	15.19	3.75	4.75	0.51	2
		MM	48	13	48	92			200	152	386	95	121	13	
3	4"x4"	IN	2	0.5	2.7	5	4	5/8"-11	9.69	7	18.12	4.5	6	0.47	2
		MM	51	13	69	127			246	178	460	114	152	12	
4	5"x5"	IN	2	0.63	3.62	6.19	8	5/8"-11	11.77	8.13	21.34	5.5	7.5	0.39	2
		MM	51	16	92	157			299	207	542	140	191	10	
6	5"x7"	IN	2.25	0.63	5.51	8.5	8	3/4"-10	14.92	10.13	27.67	5.5	9.5	0.51	2
		MM	57	16	140	216			379	257	703	140	241	13	
8	6"x9"	IN	2.75	0.63	7.2	10.62	8	3/4"-10	18.35	12.13	33.1	6.5	11.75	0.71	2
		MM	70	16	183	270			466	308	841	165	298	18	
10	6"x11"	IN	2.75	0.75	9.02	12.75	12	7/8"-9	21.31	14.13	37.19	6.5	14.25	0.71	4
		MM	70	19	229	324			541	359	945	165	362	18	
12	8"x13"	IN	3	0.75	11.26	15	12	7/8"-9	27.24	16.75	45.87	8.5	17	0.71	4
		MM	76	19	286	381			692	425	1165	216	432	18	
14	10"x15"	IN	3	0.81	13.08	16.75	12	1"-8	35.4	19.75	57.4	10.63	18.75	0.63	4
		MM	76	21	332	425			899	502	1458	270	476	16	
16	10"x17"	IN	3.5	1.05	14.81	19.01	16	1"-8	39.76	21.75	64.38	10.63	21.25	0.91	6
		MM	89	27	376	483			1010	552	1635	270	540	23	
18	10"x19"	IN	3.5	1.05	16.46	21	16	1 1/8"-7	40.51	23.75	66.5	10.63	22.75	0.75	6
		MM	89	27	418	533			1029	603	1689	270	578	19	
20	12"x21"	IN	4.5	1.24	18.35	23	20	1 1/8"-7	46.5	25.75	74.5	12.75	25	1.1	8
		MM	114	31	466	584			1181	654	1892	324	635	28	
24	12"x25"	IN	4.5	1.24	22	27.25	20	1 1/4"-7	54.13	29.75	86.88	12.75	29.5	0.98	8
		MM	114	31	559	692			1375	756	2207	324	749	25	
30	14"x31"	IN	4.5	1.44	27.5	33.75	28	1 1/4"-7	66.34	36.5	109.62	14.75	36	1.18	10
		MM	114	37	699	857			1685	927	2784	375	914	30	
36	14"x37"	IN	5	1.56	33.5	40.26	32	1 1/2"-6	77.7	42.5	129.35	14.75	42.75	0.98	12
		MM	127	40	851	1023			1974	1080	3285	375	1086	25	
42	20"x43"	IN	5	1.63	38.75	47	36	1 1/2"-6	97	49.13	150.13	21	49.5	1.5	14
		MM	127	41	984	1194			2464	1248	3813	533	1257	38	
48	20"x49"	IN	6	2	43.5	53.5	44	1 1/2"-6	109.25	55.13	168.38	21	56	1.63	16
		MM	152	51	1105	1359			2775	1400	4277	533	1422	41	

NOTE: DIMENSIONS ARE FOR REFERENCE ONLY

LET	REVISION	BY	DATE
F			
E			
D			
C			
B			
A			

TRUELINE R Valve Corporation — MONTREAL QUEBEC

TITLE: 2"~48" F8112 RS knife gate valve c/w pneumatic cylinder

DRAWN BY: JF	DATE : 4/15/11	SCALE :
APPROVED BY:	DATE :	SHEET: 1 OF: 1

MAT'L SPEC'N	DWG No.	REV
AS PER ORDER	TLCUST8112-CYLINDER	-

SHEET SIZE D